Optimizing Efficiency in Motion: Dynamic Wireless Charging Systems for Electric Vehicles

Sasila Saroj Premarathna
Electronic & Electrical Engineering
University of Bolton, Ras Al Khaimah
United Arab Emirates
sasila.premaratna@boltonac.ae

Vidhya Viswambaran
Electrical & Electronic Engineering
University of Bolton, Ras Al Khaimah
United Arab Emirates
V.Ragesh@bolton.ac.uk

2024 Advances in Science and Engineering Technology International Conferences (ASET) | 979-8-3503-4413-4/24/$31.00 ©2024 IEEE | DOI: 10.1109/ASET60340.2024.10708662

Abstract— Electrified transportation demands the establishment of diverse charging networks to encourage adoption. Electric Vehicles (EVs) can be charged wirelessly utilizing wireless charging methods as a feasible approach to eliminate the plug-in charging systems and the problems associated. Ultimate focus of this paper is to introduce the currently existing wireless EV charging mechanisms for efficient power transmission. This paper provides an overview of EV charging technologies and wireless power. The paper also presents comparative study between Conductive and inductive charging technologies. This paper aims to develop a dynamic wireless charging (DWC) technology as a transformative approach to enhance power transfer efficiency and provide operational convenience for electric vehicles (EVs). The research focuses on modelling a dynamic EV charging system for charging EVs in motion, thus addressing one of the most significant barriers to EV adoption: the limited range and lengthy charging times associated with current technologies. Through a combination of theoretical modelling, simulation the paper proposes a novel DWC system design. The proposed DWC system utilizes inductive power transfer technology, optimized through advanced circuit topologies and resonance tuning techniques to maximize transfer efficiency. The operation is analysed using MATLAB Simulink. The results demonstrated a notable increase in efficiency to over 90%. The results highlight the enhanced efficiency of Dynamic Wireless Charging (DWC) systems, suggesting the potential impact of widespread implementation of DWC systems for the advancement of sustainable EV technologies.

Keywords— Electric Vehicle, Dynamic Wireless Charging System

I. I. INTRODUCTION

Electric vehicles (EVs) have sparked a global revolution in transportation, promising a sustainable future for the transport sector [1]. The widespread adoption of EVs is dependent upon EV charging infrastructure [2]. To fulfill their role in the global energy transition effectively, Electric Vehicles (EVs) require accelerated growth, primarily achieved by reducing vehicle emissions. Conventional plug-in charging stations demands the vehicles to be in stationary points for extended periods, thus impeding the practicality of EVs for long-distance travel and efficient energy management. Dynamic Wireless Charging (DWC) technology emerges as a solution which presents a solution to this challenge by enabling vehicles to charge while on the move. Since DWC does not the need the direct electrical connections the problem of long waiting time while charging the battery can be addressed. This innovative charging mechanism harnesses the principles of inductive power transfer through the embedded infrastructure on driving paths, and thereby facilitating continuous energy supply to the EVs. The key components of the proposed DWC systems include inductive coupling, resonance tuning, and associated power electronics, forming the foundation for optimizing power transfer between embedded coils on road and the receiving modules mounted on the vehicle.

II. LITERATURE REVIEW

A. Electric Vehciles

Electric vehicles (EVs) are pivotal in creating cleaner transportation options and the promotion of low-carbon electricity generation. The future of transportation leans heavily towards electrification and Electric vehicles (EVs) are steadily gaining traction as a sustainable alternative to traditional transportation. However, the primary hurdle in wider adoption of EVs lies in enhancing the charging infrastructure. EV batteries are typically charged from the grid, making the charging of EV batteries a crucial factor in ensuring the operational efficiency and viability of electric vehicles. The soaring interest in Electric Vehicles (EVs) can be attributed to various factors, including reductions in price, alongside growing awareness of climate and environmental concerns.

B. EV charging technologies

The charging systems require a dedicated converter topology such as AC-DC and DC-DC converter, a control strategy, for charging and discharging to ensure optimal operation. EV charging integrates renewable energy resources with an objective of steering the time and location of EV charging to optimize the benefits for consumers and the grid. Figure 1 illustration demonstrates the coordination interface of charging systems of EV.

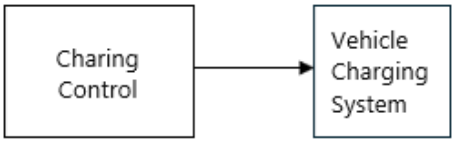

Fig. 1. Coordination interface.

Advancements in Charging technologies leverage the advantages offered by wide bandgap (WBG) devices. The primary challenge in wider adoption is aimed at decreasing the expenditure of battery packs, enhancing the energy intensity and broadening the recharging infrastructure. Generally, there are three key strategies of charging by changing the battery, inductive charging and conductive charging, Conductive charging uses a direct contact between

XXX-X-XXXX-XXXX-X/XX/$XX.00 ©20XX IEEE

Authorized licensed use limited to: National Institute of Technology Goa. Downloaded on March 03,2026 at 05:53:31 UTC from IEEE Xplore. Restrictions apply.

the EV connector and charge inlet. Three main stages are identified in charging technology [3]. Level 1(SAE_J1772 Standard) is ideal for home charging. Level 2 with also known as Fast AC charging with either 7kW (for 32A single phase) or 21 kW for (three-phase). and Level 3 Charging uses dedicated direct current (DC) for Fast DC charging", up to a power of 50kW, with approximately 20min charging time. Different Modes of EV charging Mode 1 Charging mainly used for EV Charging at home utilizes a standard power outlet with a basic extension cord. Mode 2 Charging connects the EV to the main power grid using household socket outlets with added protection devices. Mode 3 Charging uses a specialized socket, plug, and dedicated circuit. Mode 4 Charging is the DC link for high-speed charging which connects the electric vehicle to the primary power grid via an external charging device for rapid charging. To depict the diverse methods of connections Figure 2 illustrates a graphical representation of :(a) Mode 1 type connection, (b) Mode 2 type connection, (c) Mode 3 type connection, (d) Mode 4 type connection.

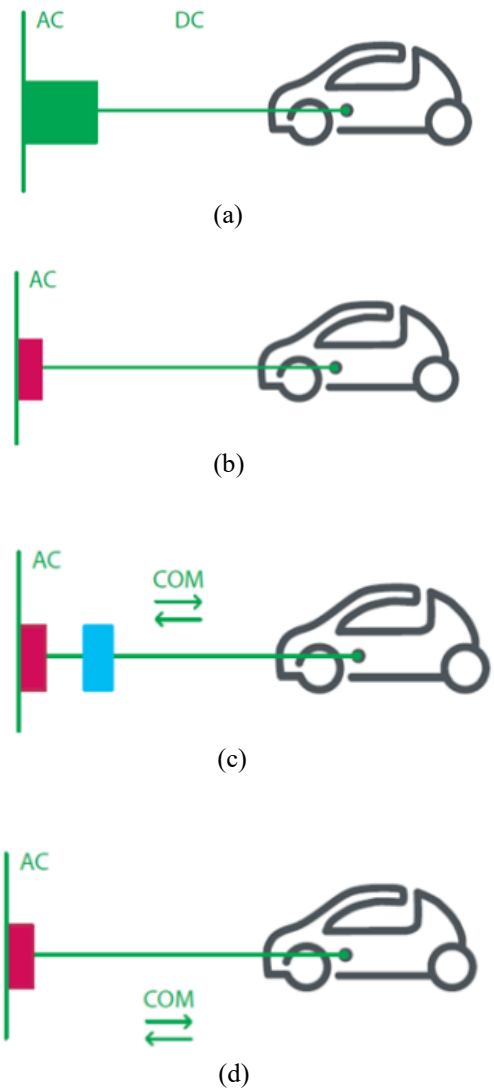

Fig. 2. (a) Mode 1 type connection, (b) Mode 2 type connection, (c) Mode 3 type connection, (d) Mode 4 type connection.

Charging systems are crucial for EVs, as they mitigate the consequence of EV charging on the power grid and provide the flexibility needed to increase renewable energy usage. By employing intelligent charging strategies, EV batteries can help integrate significant amounts of solar and wind energy into existing electrical grids. This is achieved by utilizing EV battery storage to stabilize grid fluctuations caused by renewable sources. The demand for convenient and effective EV charging solutions is growing as the automotive industry transitions to electrification. Wireless charging systems have emerged as a game-changing solution due to the limitations of conventional charging methods. Ultrafast charging technology can charge EV batteries to 80% capacity in under 20 minutes. The charging systems utilize internet connectivity to optimize charging based on grid demand, electricity pricing, and user requirements, reducing electricity costs and grid stress during peak periods. Charging as a Service (CaaS) is an emerging trend which offers charging services through subscription or pay-per-use models, making EV charging more accessible and eliminating the need for EV owners to invest in personal charging infrastructure. The two primary technologies are used to define how EVs can interact with the grid, unidirectional charging (V1G) and bidirectional charging. Bidirectional technology includes vehicle to grid (V2G) and grid-to-vehicle (G2V). V2G technology empowers EVs to harness power from the grid and direct the electricity back into it. Hence V2G can help in stabilizing the grid during peak demand periods and integrate larger shares of renewable energy sources by using EVs as mobile storage units. Inductive charging station is facilitated by Inductive charging employing electromagnetic field to convey energy between the road and the charging circuit of the EV. Energy is transferred along an inductive coupling to charge the EV batteries. The induction coil within the charging base generates an interchanging electromagnetic field, and a second induction coil in the EV receives power from this field and transforms it into electric current to power up the battery. Two adjacent induction coils create an electrical transformer effect. Main advantages of Inductive charging include durability and elimination of cables and Slower charging speed [4].

C. Wireless Charging in EVs

Wireless (or inductive) charging is gaining traction as a convenient way to charge EVs without the need for cables. Inductive wireless charging has captured significant interest as a result of its capability to modernize the EV charging arena. Developments in this area aim at increasing efficiency and range of power transfer, with potential applications ranging from personal vehicles to public transportation systems. In the diagram appears in Figure 3 exhibits the common configuration of a wireless charging system.

Authorized licensed use limited to: National Institute of Technology Goa. Downloaded on March 03,2026 at 05:53:31 UTC from IEEE Xplore. Restrictions apply.

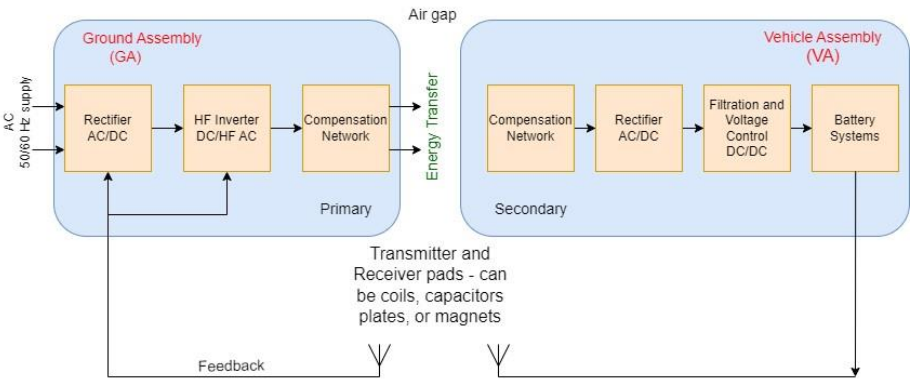

Fig. 4. Common configuration of a Wireless Charging system.

Recent study on wireless charging in EV's emphasizes the measures implemented to augment the operational effectiveness of inductive power transfer. Findings from the research indicates that there's a potential to mitigate the power loss during the operation of wireless power transfer through improvements in coil designs, resonance tuning and power electronics [5]. Moreover, researches have directed their attention to diminish the power dissipation which happens during the power transfer process as it affects not only the power transfer efficiency but also the overall performance of the wireless charging system. Recent study suggest that through thorough inspection of magnetic couplers and FEM (Finite Element Methods) which harness the computational algorithms that optimize the system operation, the power dissipation can be minimized in order to optimize the efficiency of the power transmission [6]. The

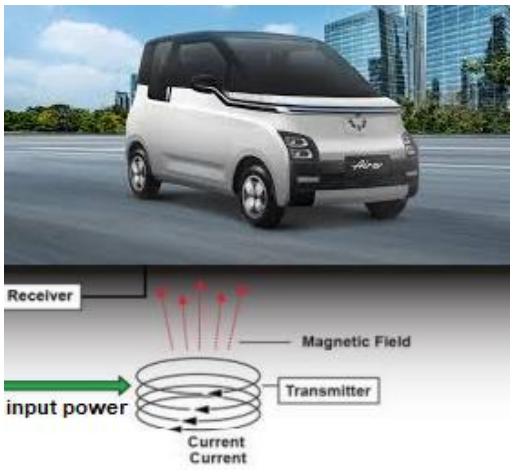

Fig. 5. Inductive Charging

overall efficiency of the power transmission system can be negatively affected by the energy losses which occurs in inductive phase due to the resistance of the charging coils culminating to the outcome of reduced charging speeds as well as increased operational costs. Fig. 5 is a visual representation of an inductive charging system. A research have been conducted to address the energy losses interconnected with resistance of the charging coils. It emphasizes the prospect of superconducting elements in coil

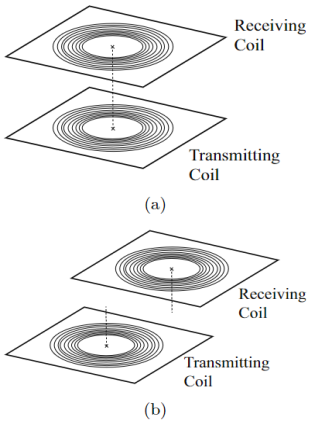

Fig. 3. (a)Aligned and (b)misaligned charging pads of a Wireless Charging in EV

designs of the inductive system. Superconducting materials are substances which portray zero resistance at temperatures beneath their critical point where the coil allows the transmission of large currents with minimal energy losses [7]. In context of power transfer optimization recent study shows 90.4% efficiency in power transmission offering tangible data which has taken factors such as coil configuration, resonance frequency and control algorithms into account to optimize the system through alleviation of potential causes which leading to energy losses namely coil misalignment, electromagnetic interference and resistive losses [8]. Despite these efforts of optimizing power transfer efficiency the necessity to address the accurate alignment positioning of the power pad and the EV remains crucial due to the lack of investigations. A recent study that has been undertaken clearly shows the efforts it has taken in order to address misalignment impact by incorporating smart positioning algorithms and magnetic resonance coupling which enhances misalignment tolerance in the system [9]. The illustration in Figure. 4 conveys the (a) aligned and (b) misaligned inductive network of an EV. In the sphere of inductive wireless charging in EV's interoperability standards plays a major role interconnecting the necessary components of the charging facility. This includes the Electric vehicle, charging infrastructure and power grid facility to harmonize together to function in unison. Most importantly these standards foster the interoperability among

Authorized licensed use limited to: National Institute of Technology Goa. Downloaded on March 03,2026 at 05:53:31 UTC from IEEE Xplore. Restrictions apply.

diverse EV's regardless of their model or manufacturer. A study exist which highlights the significance of the sophisticated interoperability standards which incorporates the communication protocols, criteria for power transfer, and safety measurements nurturing a well-integrated and efficient charging infrastructure [10]. Furthermore, prioritizing the safety measurements are crucial in establishing confidence to encourage board adoption of EV. A study has been done with the aim of addressing the safety measurements which integrates real-time monitoring systems, fault detection algorithms and electromagnetic shielding. Employing real-time monitoring in the system enable swift identifications of irregularities or safety risks. Integration of fault detection algorithms in system ensures the safety of the overall system and the operator. Assimilation of electromagnetic shielding maintain a consistent and secure charging process [11]. The previous investigations and implementations emphasize the noteworthy progress and leaps made in improving inductive wireless charging in EV's. Despite this, as we headed towards a enhanced and efficient future, integration of dynamic wireless charging systems comes in handy as it pledges the charging in motion. Consequently dynamic wireless charging systems emerges as a game changer in the future transportation innovations.

D. Dynamic Wireless Charging System for EV

Dynamic Wireless Charging Systems for EV reflect a cutting-edge evolution pertaining to environmentally-sound transportation technology which introduces on the go charging technology for EV. This novel method of charging is capable of addressing the hardships faces by Wireless Charging in EV's mainly the EV driving range concern and charging facility concerns. Conventional charging methods require EVs to have batteries which are larger in size and capacity, these conventional EV batteries take up more space and weight resulting in range anxiety and more charging time. To mitigate this issue researchers, suggest that DWC Systems is a potential contender facilitating the EV with diminished volume of expensive battery storage mandated by the vehicle. DWC Systems are capable of harnessing power straightaway from the roadway charging infrastructure in motion mode, this eliminates the requirement for the vehicles to have larger batteries resulting in lessening the heaviness of the EV. Load reduction in the system increases efficiency by operating on low energy levels to sustain the speed [12].

Dynamic Wireless Charging systems utilize multiple methods of wireless power transfer technological methods namely RF, inductive coupling, capacitive coupling, and magnetic resonance. It has been demonstrated by research that out of these methods inductive coupling and magnetic resonance methods are widely utilized in charging systems due to their ease of use and enhanced efficiency compared to other methods. Specifically in inductive coupling and magnetic resonance systems integrating an intermediate coil to the system which could possibly enhance the effectiveness of the overall system and the charging process. In inductive coupling method of EV charging, when a three-coil system is utilized to wireless power transfer it can potentially optimize the system performance through the assistance of intermediate coil which incorporate establishing system requirements and selecting optimum resonance frequencies [13]. The visual depiction in Figure 6 illustrate a design of three coil inductive power transfer link in a Dynamic Wireless Charging system. However the power transfer efficiency enhancement of the Dynamic wireless charging systems is still continues to be a vital focus of study. Precision of coil alignments of transmitting coil and receiving coils are pivotal for couple of reasons. Misalignment of the coils in DWC system results in energy losses during the powerr transfer process of the charging system as well as it diminishes the efficiency and the rate of charging. Safety of the charging infrastructure is at a risk when the coils are not aligned well due to the potential of over heating. Well aligned charging system minimizes the time taken to charge the battery of thr EV by speeding the charging process. A study which has been done aiming the mitigation of misalignments in DWC systems emphasizes the possibility of tackling the issue by incorporating dynamic positioning mechanisms and advanced control algorithms. These mechanism systems includes critical components which are sensors which detects the real time positioning and the orientation if the coils, feedback system which compare the sensor data and the actual placements of the coils and the actuators which positions the coils into its optimal position[14]. Furthermore, a distinct study which aims to address the challenges related to misalignment concerns in DWC systems has introduced a specific coil design called Quad D Quadrature (QDQ), these specific coil design holds specific significance in preserving higher coupling coefficients compared to the conventional coil designs. It ensures higher performance in energy transfer by high energy transfer performance despite the sub optimal coil alignment scenarios [15]. Figure 7 showcases a Quad D Quadrate (QDQ) coil design model implemented using JMAG software.

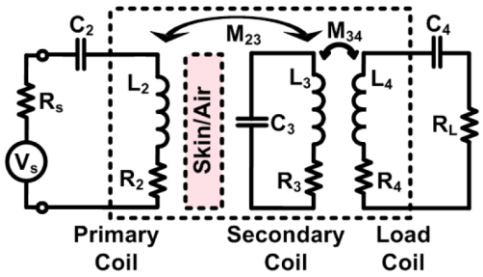

Fig. 6. Three coil inductive power transfer link in DWC System

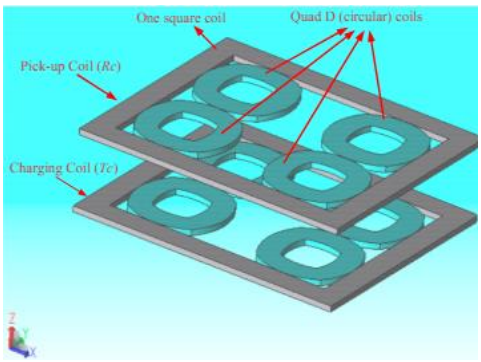

Fig. 7. QDQ Coil Design Model

Authorized licensed use limited to: National Institute of Technology Goa. Downloaded on March 03,2026 at 05:53:31 UTC from IEEE Xplore. Restrictions apply.

Moreover, the study has highlighted the necessity of addressing the power pulsation in DWC systems as it affects the charging efficiency, battery health and system stability. Power pulstaion can cause fluctuations in power transmission rate between the coils which could potentially reduce the efficiency of the charging infarstructure. Unregulated energy fluctuations in DWC Systems can possibly expose the battery to danger as the sudden surges in charging power flows has the potential to affect the longevity and performance of the battery. Research have demonstrated the influence of power regulation through engagement of advanced control algorithms, utilization of feedback mechanisms to adjust the system paremeters and filtering techniques to rectify the fluctuations [14].

Inductive Power Transfer Method (IPT) method is a dominant mode of power transfer as it offers increased efficiency during the power transferring process. It allows seamless dynamic wireless charging for EV through facilitating the charging ability while the vehicle is in motion as it eradicated the necessity to accessibility to a charging facility. IPT system the charging facility can be directly integrated into the roads or any kind of transportation infrastructure. A recent review on Dynamic Wireless Charging advancements showcases the significant impact of IPT power transfer systems in DWC. This investigation proposes an innovative transmitter coil design to boost the strength and arrangement of magnetic field to achieve optimum power transfer to the receiver of the vehicle. Further the research discusses the enhancements in magnetic coupling techniques, particularly magnetic resonance coupling which has the potential to diminish the energy loss occurs during the power transmission [16]. Range anxiety is one of the major hurdles encountered by EV which has negatively affected its widespread adoption. Long distance commutes spark the scarcity of the lack of charging infrastructures which could potentially strand the vehicles without recharging. The research emphasizes the ability to eliminate range anxiety by utilizing the inductive power transfer or capacitive power transfer techniques in DWC systems, as it offers elevated ranges by providing charging in motion as well as it dismiss the requirement of frequent stopping at charging facilities for recharging enhancing the user satisfaction [17]. In another research project which focuses on finding optimal compensation topologies for the inductive link of the system mention that there is potential for efficiency enhancement of wireless EV charging through fine tuning of real time variables and mutual inductive coupling evaluation. Simulation implemented through MATLAB software has suggested substantial improvements in the efficiency of EV charging systems particularly in the context of dynamic loading conditions. The system utilizes LCL-S topology as it facilitates efficient power transfer by adapting to fluctuations in load impedance and mutual inductance. This emphasizes the exceptional outcomes of LCL-S topology in monitoring modifications in fluctuations and achieving higher efficiency levels. [18]. To conclude, in the arena of sustainable and environmentally friendly transportation Dynamic Wireless Charging systems emerge as a game changer in revolutionizing the future of transportation. DWC Systems present an alternative to the conventional EV charging systems addressing the complications faced by the ordinary charging systems such as range anxiety, increased battery size and extended charging time. This enhances the extensive acceptance of EV in the transportation industry as well as it has the potential to provide a user centric experience inevitably forging a path to resilient and environmentally sound transportation system.

E. Cost Analysis

Pertaining to cost and infrastructure, dynamic wireless charging systems exhibit significant variations compared to static wireless charging systems in electric vehicles (EVs). Dynamic wireless charging systems facilitate vehicles to charge as the vehicles are in motion. This process necessitates the need for implanting the coils beneath the road surface and upkeeping them regardless of the deterioration caused by the usage. In the DWC system the embedded coils seamlessly transmit the magnetic energy to a transmitter counterpart positioned below the vehicle making it feasible to charge while the vehicle is being driven [19,20]. In contrast, static wireless charging systems integrates charging pads which are in charging stations, parking lots and other static locations. SWC systems eliminate the need for large scale modifications to the current road networks, providing more affordable economical infrastructure installation. These systems integrate charging pads as the power transmission is achieved through Inductive power transfer method where an electromagnetic field produced by the charging pad deliver the energy to the receiver mounted on the vehicle [21,22]. Installation of customized receivers is a necessity in both systems, where specifically in SWC systems, the receiver is a more economically sound option as it is distinguished by simplicity and budget friendliness [23]. Due to its substantial installation, upkeep expenditures and technological intricacy, restricts the broad acceptance of the DWC systems even though it provides continuous charging and extended ranges [24].

III. System Overview

The architecture of the dynamic wireless charging system integrates DC power supply, DC/AC inverter, primary and secondary compensation networks function as the inductive link within the system to ensure the seamless power transmission, and AC/DC rectifier as well as an EV battery, crafted to enable charging functionality. Figure. 8 representation illustrates the block diagram of DWAC system.

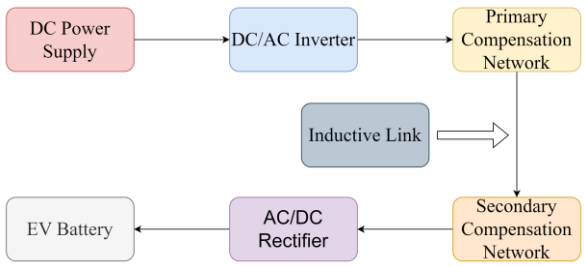

Fig. 8. Block Diagram of Dynamic Wireless EV charging System.

Authorized licensed use limited to: National Institute of Technology Goa. Downloaded on March 03,2026 at 05:53:31 UTC from IEEE Xplore. Restrictions apply.

DC power supply of the DWCS functions as the key electrical energy source of the EV charging system. The system utilizes a four-level inverter to transform direct current (DC) into alternative current (AC) which operates at four different voltage thresholds. Fundamental function of the four-level inverter incorporates transferring the DC input voltage receive by the primary power supply to shift into a multilevel alternative current (AC) output voltage this phenomenon utilizes Insulated gate bipolar transistors (IGBT) electronic switches. The four-level inverter incorporates pulse width modulation technique to yield the expected outcome input dc voltage as +Vdc/4, +Vdc/2, -Vdc/4 and -Vdc/2. The four-level inverter utilized in the system offers various advancements. It diminishes the harmonic distortion which occurs during the transition of DC to AC while enhancing overall efficiency of the system. Primary and secondary compensation network of the wireless EV charging system is paramount in the execution of inductive power transfer. Inductive charging technology for EV charging systems incorporates two fundamental components which are the primary side and the secondary side. The primary side of the EV system is generally fixed in the ground as the charging pad and the secondary side of the EV system is connected to the EV. Both the primary and the secondary side of the network contains coils that have the capacity to generate magnetic flux. When the high frequency alternative current is flowing through the primary coil which induces a magnetic field, and the secondary coil retrieves the energy through the phenomenon called resonance. The alternating current from the secondary compensation network is the fed to a Diode-Clamped Multi-Level Converter/Diode-clamped rectifier which can turn the alternative current (AC) into direct current (DC) this operation is carried out by diodes and capacitors. In this method the diode clamped capacitors are arranged sequentially with the AC input of the secondary compensation network. Utilization of diode clamped capacitors has been restricted to a fraction of the peak AC voltage hence the rectifier is able to accomplish different voltage levels. During each half cycle of the AC electrical supply voltage the diodes form the rectifier allow the precise voltage level charging of the capacitor which incorporate simple voltage balancing strategies to maintain the uniform voltage synchronization across the capacitors. Due to the simplicity and reliability diode clamped rectifiers are commonly recognized in moderate voltage and substantial power operations.

IV. METHODOLOGY

A. System Design & Modeling

Based on the results of the literature review, the design of the Dynamic WPT system was developed, taking into consideration variables including power transfer efficiency, safety, and ease of use. The design specifications were established, including the frequency of operation, power levels, and the elements within the WPT system. The design of the WPT system was modeled and simulated using computer software, such as MATLAB to evaluate its performance under different operating conditions. The simulation model was validated through comparison with experimental data from existing WPT systems. The proposed dynamic wireless charging system leverages a four-level inverter and a diode clamped multilevel converter (DCMCL) as key elements pertaining to the system. In the preliminary phase of the system, it integrates a four-level inverter to transmute the direct current input voltage delivered from the power source to a multilevel alternating current output voltage. This transformation is accomplished through a particular electronic switch called Insulated Gate Bipolar Transistor (IGBT) which utilizes pulse width modulation method to manipulate the width of the pulse waveforms. The four-level inverter utilized in this system facilitates the system to diminish the signal degradation caused by harmonic frequencies which occurs during the DC to AC transformation process. Using this approach, the inverter allows the DWC system to boost the power transfer efficiency.

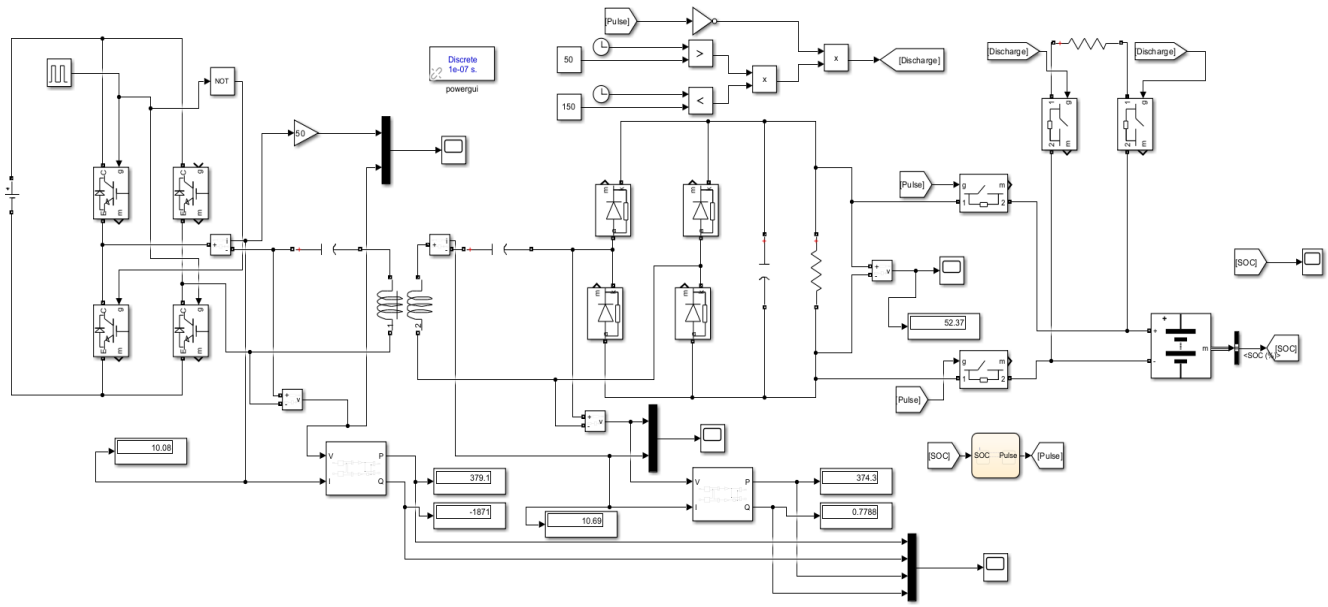

Fig 9 MATLAB Design of the Wireless EV charging system.

Authorized licensed use limited to: National Institute of Technology Goa. Downloaded on March 03,2026 at 05:53:31 UTC from IEEE Xplore. Restrictions apply.

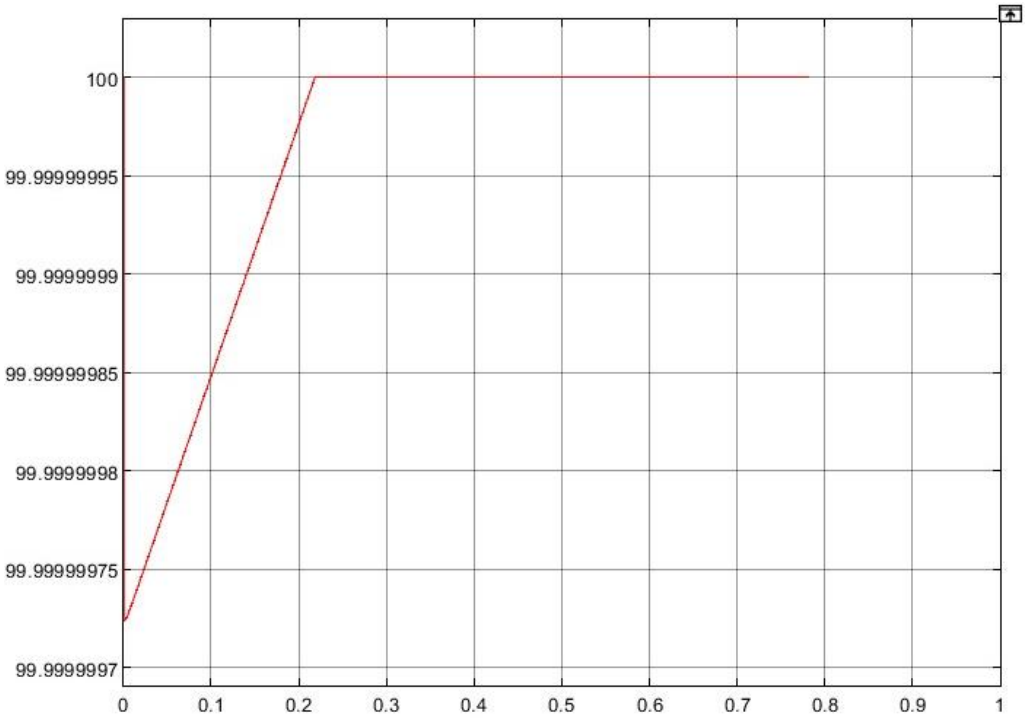

Fig 10 SOC of the battery

In accordance with research data which indicates the possibility of reaching 88.3%-90.4% efficiency rates using four-level inverter in a dynamic wireless charging system [25]. Furthermore, in this DWAC setup Diode clamp multi-level converter is integrated to transmute the AC output voltage delivered from the secondary compensation network to DC output voltage to drive the battery of the EV vehicle. This transition is carried out by the diode clamped capacitors which ensures the charging at a fixed voltage level maintaining consistent harmonization across each half cycle of the AC waveform. The DCMLC is capable of handling tasks involving moderate voltages with substantial power demands which is optimal for operations of Dynamic Wireless charging systems. A recent investigation demonstrates the effectiveness of integrating a diode rectifier, specifically a Diode clamped multi-level converter during the transmutation of AC to DC voltage in a Dynamic Wireless Charging System to power the EV battery [26]. Selection of the integral parts and the circuitry of the system was meticulously accomplished to diminish the power losses occurs during the transmutation of the voltage power, to ensure the consistency during the operation and to survive the high-power requirements of the system. Components like DCMLC consist of a lesser number of sub-components with low potential of failure which offer seamless functioning to guarantee and enhance the user centric encounter. Fig 9 offers a visual representation of the MATLAB Simulink model of the proposed DWC system.

V. RESULTS ANS DISCUSSION

The simulation results were analyzed and compared with existing solutions to scrutinize the performance of the proposed WPT system for EV charging. The results were interpreted in terms of key metrics, such as power transfer efficiency, electromagnetic interference, and safety, in conclusion, the designed dynamic WPT system was able to work with a high efficiency of 97.81%. Considering the findings of the simulation and analysis, conclusions were drawn and recommendations for future work were made. The goal of this project is to provide insights into the potential of WPT technology for EV charging and to pave the way for its eventual implementation in real-world applications. Power transmitted by the wireless power transfer system. The outcomes of this analysis would be used to recognize areas for optimization and boost efficiency of wireless power transfer. Then the system performance will be evaluated in terms of its ability to transfer power over a specified distance, the stability of the system, and the response time of the system. The results of this analysis would provide insights into the limitations and strengths of the system and would be used to identify areas for improvement. Energy Losses is another important aspect of the project. Energy losses would include losses due to electrical resistance, electromagnetic radiation, and other factors. The results of this analysis would be used to identify areas for improvement and optimize the performance of the wireless power transfer.

Efficiency is calculated using the Equation

$$Power\ Transfer\ efficiency: \frac{Power\ received\ by\ the\ EV\ at\ the\ inductive\ link}{Power\ transferred\ by\ the\ inductive\ link\ to\ the\ EV}$$

$$= \frac{464.2}{474.6} \times 100$$

$$= 97.81\%$$

Authorized licensed use limited to: National Institute of Technology Goa. Downloaded on March 03,2026 at 05:53:31 UTC from IEEE Xplore. Restrictions apply.

VI. CONCLUSION

The research encompasses the development of an intelligent power management system designed to adjust to the evolving conditions of an electric vehicle (EV) in motion. A dynamic Wireless Power Transfer (WPT) system has been structured and implemented. The dynamic EV charging system was designed, and the results were analysed. It was found that the Dynamic WPT system efficiency was 98% which was high efficiency when compared to the static WPT system efficiency. In terms of infrastructure requirements, dynamic wireless charging requires the installation of primary coils in the roadway, which can be expensive and require significant planning and coordination with local authorities. Static wireless charging, on the other hand, requires the installation of charging pads at designated locations, which can be less expensive and easier to install. Overall, the future of wireless charging for electric vehicles shows potential, and it is anticipated that further investigation and implementations in this arena is expected to lead to even more efficient and convenient charging solutions.

REFERENCE

[1] F. Kong and X. Liu, "Sustainable Transportation with Electric Vehicles," Foundations and Trends® in Electric Energy Systems, vol. 2, pp. 1-132, Jan. 2017.

[2] M. Coffman, P. Bernstein, and S. Wee, "Electric vehicles revisited: a review of factors that affect adoption," Transport Reviews, vol. 37, pp. 1-15, Aug. 2016.

[3] S. Hemavathi and A. Shinisha, "A study on trends and developments in electric vehicle charging technologies," Journal of Energy Storage, vol. 52, p. 105013, 2022.

[4] C. Unal et al., "A review of charging technologies for commercial electric vehicles," International Journal of Advances on Automotive and Technology, vol. 1, no. 18, Jan. 2018,

[5] P. Machura and Q. Li, "A critical review on wireless charging for electric vehicles," Renewable and Sustainable Energy Reviews, vol. 104, pp. 209-234, 2019.

[6] K. V. V. S. R. Chowdary, K. Kumar, B. Nayak, A. Kumar, and M. Bertoluzzo, "Dynamic Wireless Charging Performance Enhancement for Electric Vehicles: Mutual Inductance, Power Transfer Capability, and Efficiency," Vehicles, vol. 5, no. 4, pp. 1313-1327, 2023.

[7] S. Gadagamma, V. Manoj, C. Harika, and H. Dasireddy, "A Review of Advancements in Wireless Charging Technologies for Electric Vehicles," International Journal of Scientific Research in Engineering and Management, vol. 7, pp. 1-9, Dec. 2023.

[8] M. Rabih, M. Takruri, M. Al-Hattab, A. A. Alnuaimi, and M. R. Bin Thaleth, "Wireless Charging for Electric Vehicles: A Survey and Comprehensive Guide," World Electric Vehicle Journal, vol. 15, no. 3, article no. 118, 2024.

[9] P. Vishnuram, S. P., N. R., K. Vijayakumar, and B. Nastasi, "Wireless Chargers for Electric Vehicle: A Systematic Review on Converter Topologies, Environmental Assessment, and Review Policy," Energies, vol. 16, no. 4, article no. 1731, 2023.

[10] M. Rabih et al., "Wireless Charging for Electric Vehicles: A Survey and Comprehensive Guide," World Electric Vehicle Journal, vol. 15, no. 3, Art. no. 118, pp. 1-9, 2024.

[11] P. Machura and Q. Li, "A critical review on wireless charging for electric vehicles," Renewable and Sustainable Energy Reviews, vol. 104, pp. 209-234, 2019.

[12] M. Fuller, Wireless charging in California: range, recharge, and vehicle electrification, Trans. Res. Part C: Emerg. Technol. 67 (2016) 343–356.

[13] M. SangCheol, K. Bong-Chul, C. Shin-Young, A. Chi-Hyung, M. Gun-Woo, Analysis and design of a wireless power transfer system with an intermediate coil for high efficiency, Indust. Electr., IEEE Trans. 61 (2014) 5861–5870.

[14] R Wang, Y Shi, J Wang, Y Wang, "An Efficiency Optimization Strategy for Electric Vehicle Wireless Energy Transmission System" Journal of Physics: Conference Series,vol 2488 (1), pages 012-020, May 2023.

[15] K. A. Kalwar, S. Mekhilef, M. Seyedmahmoudian, and B. Horan, "Coil Design for High Misalignment Tolerant Inductive Power Transfer System for EV Charging," Energies, vol. 9, no. 11, p. 937, 2016. F. Musavi, W. Eberle, Overview of wireless power transfer technologies for electric vehicle battery charging, IET Power Electr. 7 (2014) 60–66.

[16] A. A. S. Mohamed, A. A. Shaier, H. Metwally, and S. I. Selem, "An Overview of Dynamic Inductive Charging for Electric Vehicles," Energies, vol. 15, no. 15, article no. 5613, 2022.

[17] M. Amjad, M. Farooq-i-Azam, Q. Ni, M. Dong, and E. A. Ansari, "Wireless charging systems for electric vehicles," Renewable and Sustainable Energy Reviews, vol. 167, p. 112730, 2022.

[18] K. V. V. S. R. Chowdary, K. Kumar, B. Nayak, A. Kumar, and M. Bertoluzzo, "Dynamic Wireless Charging Performance Enhancement for Electric Vehicles: Mutual Inductance, Power Transfer Capability, and Efficiency," Vehicles, vol. 5, no. 4, pp. 1313-1327, 2023.

[19] D. M. Nguyen, M. A. Kishk, and M.-S. Alouini, "Dynamic charging as a complementary approach in modern EV charging infrastructure," Scientific Reports, vol. 14, no. 1, p. 5785, Mar. 2024

[20] B. Du, A. V. Sreenivasan, M. S. Sheng, P. Ranjitkar, L. Wen, B. Sharp, and A. Raith, "Optimal deployment of dynamic wireless charging infrastructure for battery electric buses – a case study in Auckland, New Zealand," Journal of the Royal Society of New Zealand, vol. 0, no. 0, pp. 1-20, 2024

[21] S. Jeong, Y. J. Jang, and D. Kum, "Economic Analysis of the Dynamic Charging Electric Vehicle," IEEE Transactions on Power Electronics, vol. 30, pp. 1-1, Nov. 2015

[22] B. Csonka, "Optimization of Static and Dynamic Charging Infrastructure for Electric Buses," Energies, vol. 14, no. 12, Art. no. 3516, 2021

[23] R. C. Majhi, P. Ranjitkar, and M. S. Sheng, "Analyzing electric vehicle users' intention to use dynamic wireless charging facilities: A study from New Zealand," Transportation Research Part F: Traffic Psychology and Behaviour, vol. 102, pp. 125-141, 2024

[24] C. Panchal, S. Stegen, and J. Lu, "Review of static and dynamic wireless electric vehicle charging system," Engineering Science and Technology, an International Journal, vol. 21, no. 5, pp. 922-937, 2018

[25] Y. Liu, R.K. Mai, D. Liu, Y. Li, and Z. He, "Efficiency Optimization for Wireless Dynamic Charging System With Overlapped DD Coil Arrays," IEEE Transactions on Power Electronics, vol. PP, pp. 1-1, Sep. 2017

[26] Y. Shanmugam et al., "A Systematic Review of Dynamic Wireless Charging System for Electric Transportation," IEEE Access, vol. PP, pp. 1-1, Dec. 202

Authorized licensed use limited to: National Institute of Technology Goa. Downloaded on March 03,2026 at 05:53:31 UTC from IEEE Xplore. Restrictions apply.